MSP for Secure VoIP Gateways and Phones, Wired and Wireless

GENERAL

The MSP2020 belongs to a full family of Multi-Service Processors designed to meet the performance, QoS and security needs of communications equipment used within the customer premise. The MSP2020 is an ideal solution for VoIP Gateways and Secure Wired and Wireless IP Phones. As shown below, it includes a MIPS CPU, three 10/100 Ethernet MACs, TDM interface, PCI interface, and a security engine.

The MSP2020 provides a new level of price performance for VoIP Gateways, and Secure Wired and Wireless IP Phones. Because the MSP2020 eliminates the need for a separate processor, voice processing DSP, security chip and multiple Ethernet MACs, systems can now be built with fewer chips at a very affordable price point.

The MSP2020 has a unique systems architecture that provides wire-speed performance. This architecture includes a powerful MIPS CPU, a 4.25 Gbps bus, 16KB Scratchpad, and intelligent context aware DMA engines. Together, this results in an extremely cost effective VoIP solution that includes security. Integration of 802.11a, b, and g wireless LANs is easily facilitated through the PCI interface.

To reduce time-to-market, PMC-Sierra offers comprehensive support for the MSP2020, including evaluation boards, software, application engineering support, training, and documentation that together accelerate the product development process. In addition, the MSP2020 supports Linux, VxWorks, or custom operating systems.

ADVANTAGES

- Cost effective VoIP solutions
- Versatile PCI and ELB Buses
- Support for Global IP Sound technology
- 3 10/100 Ethernet MACs
- Flexible GPIO architecture to easily support keypad scan
- High performance systems architecture with on-chip security engine
- Significant cost reduction through integration of multiple processors and discrete parts on a single chip
- Architecture that scales to voice and data applications
- Easy porting of customer and third party software and protocol stacks

APPLICATIONS

- 1-port Secure VoIP Gateway, Wired and Wireless
- IP Phones, Wired and Wireless
- TDM Ethernet Bridge

BLOCK DIAGRAM

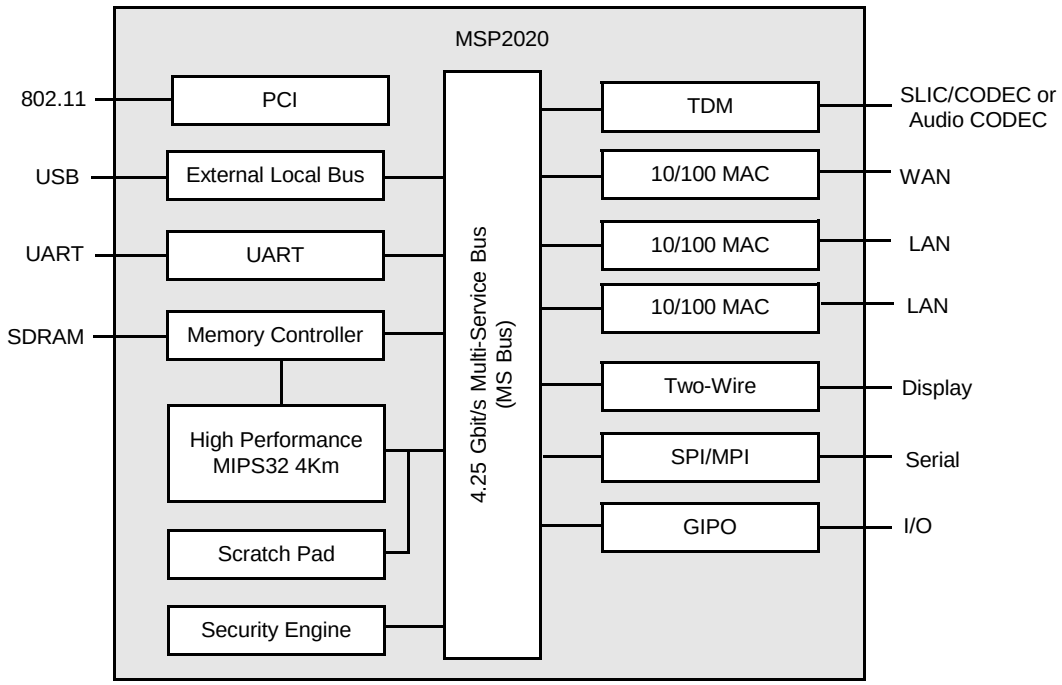

PROPRIETARY AND CONFIDENTIAL TO PMC-SIERRA, INC., AND FOR ITS CUSTOMERS' INTERNAL USE

© Copyright PMC-Sierra, Inc. 2004
All rights reserved.

MSP for Secure VoIP Gateways and Phones, Wired and Wireless

ELECTRICAL

- 276 pin PBGA
- Vcc 3.3V I/O, 1.8V core
- Power consumption 1.4W

SYSTEM PROCESSOR

- High performance MIPS32 4Km processor at 170 MHz
- 16 KB instruction cache, 16 KB data cache
- 16 KB Scratchpad

ULTRAFAST MULTI-SERVICE BUS (MS BUS)

- Peak bandwidth of 4.25 Gbps
- True parallel processing

LAN INTERFACE

- 3 Independent 10/100 Ethernet MACs
  - MII/RMII
- Supports VLAN tagging

VOICE INTERFACE

- TDM Interface

SECURITY ENGINE

- Hardware accelerator for AES, DES, 3DES, HMAC-MD5, and HMAC-SHA-1
- 32 Bit true random number generator
- IPSec compliant

HIGH PERFORMANCE SYSTEM BUSES

- PCI interface (32-bit, 33 MHz)
  - PCI V2.1 and V2.2 compatible
- Flexible external local bus interface
  - Up to 25 MBps data throughput

SYSTEM CONTROL

- Four interrupt inputs
- 55 GPIOs
- MIPS timer, 2 system timers, and watchdog timer
- Block copy engine

MISCELLANEOUS INTERFACES

- 2 UARTs
- SPI/MPI
- Two-wire serial

MEMORY CONTROLLER

- Glueless interface to 256 MB of SDRAM
- Glueless interface to 32 MB of flash

SOFTWARE

- APIs: MACs, VoIP, Security engine, and Block Copy
- Board support package

DEVELOPMENT TOOLS

- Support for Linux and VxWorks
- Evaluation boards
- Third party tool chains

THIRD PARTY SUPPORT

- Voice Processing
  - GIPS™ - Global IP Sound - NetEq
  - RADVISION™ - H.323, SIP, MGCP
- EJTAG Debuggers
  - EPI - MAJIC probe
  - WindRiver - visionICE II

Head Office:
PMC-Sierra, Inc.
8555 Baxter Place
Burnaby, B.C. V5A 4V7
Canada
Tel: 1.604.415.6000
Fax: 1.604.415.6200

To order documentation,
send email to:
document@pmc-sierra.com
or contact the head office,
Attn: Document Coordinator

All product documentation is available on our web site at:
http://www.pmc-sierra.com
For corporate information,
send email to:
info@pmc-sierra.com

PMC-2041689 (R1)
© Copyright PMC-Sierra, Inc. 2004. All rights reserved.

For a complete list of PMC-Sierra's trademarks and registered trademarks, visit: http://www.pmc-sierra.com/legal/

PROPRIETARY AND CONFIDENTIAL TO PMC-SIERRA, INC., AND FOR ITS CUSTOMERS' INTERNAL USE